Ohio® Medical

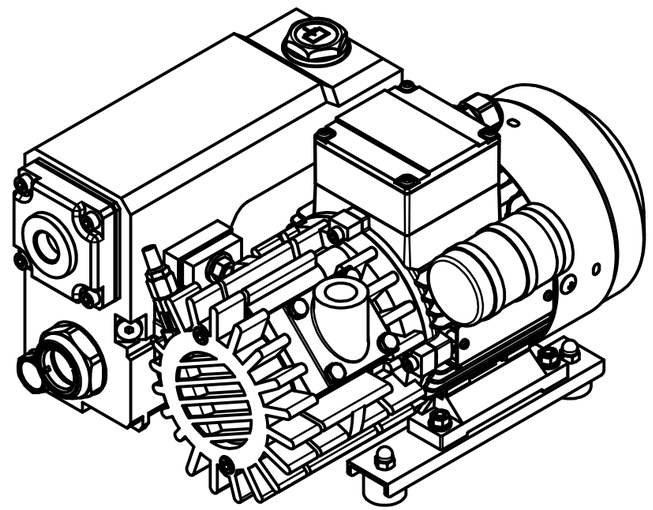

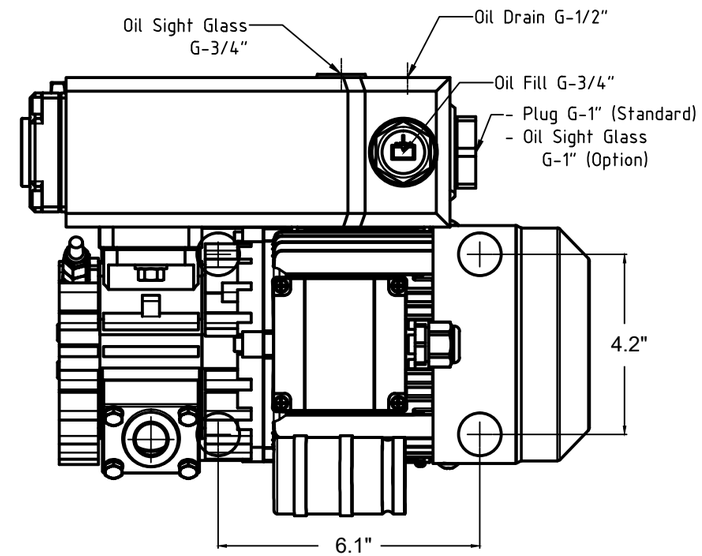

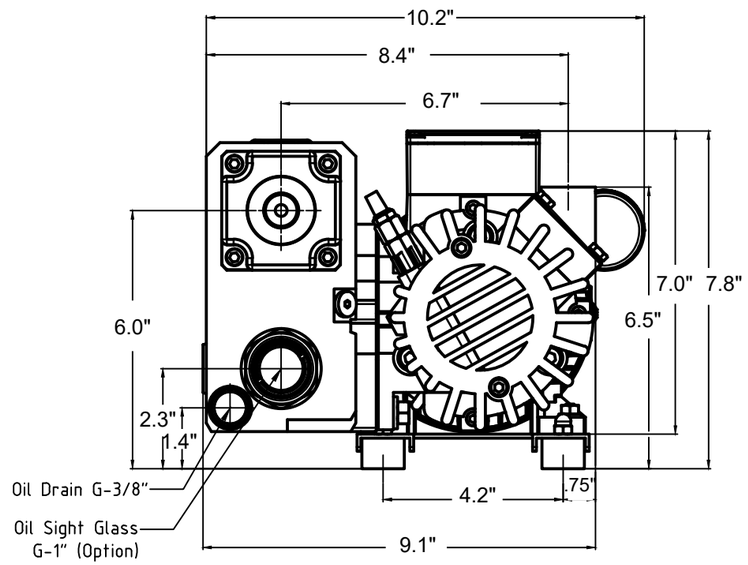

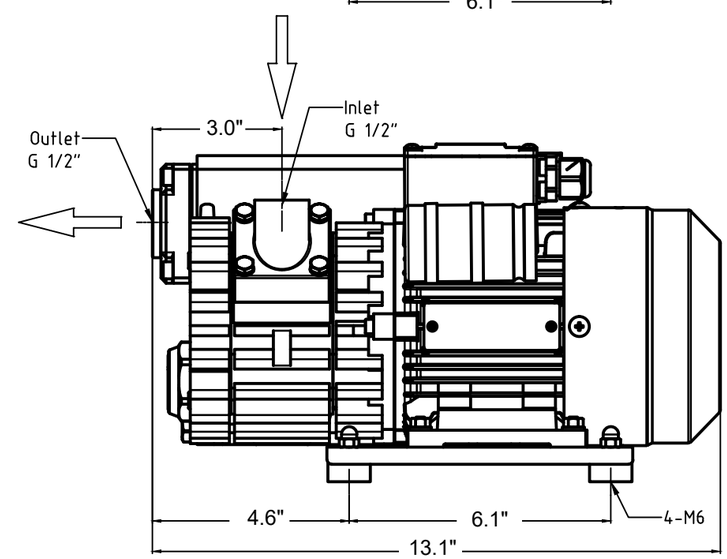

3	. .			APP. BY			SCALE. 1:1
2	. .				S1X Part # 262332--1 HP 230/460 v. 3 ph. S1X Part # 262331--1 HP 115 v. 1 ph.		SelecTorr S1X Rotary Vane Vacuum Pump
1	. .						
NO	REVISIONS					DWG NO: 13-W020-00	DATE: 2015. 07. 12