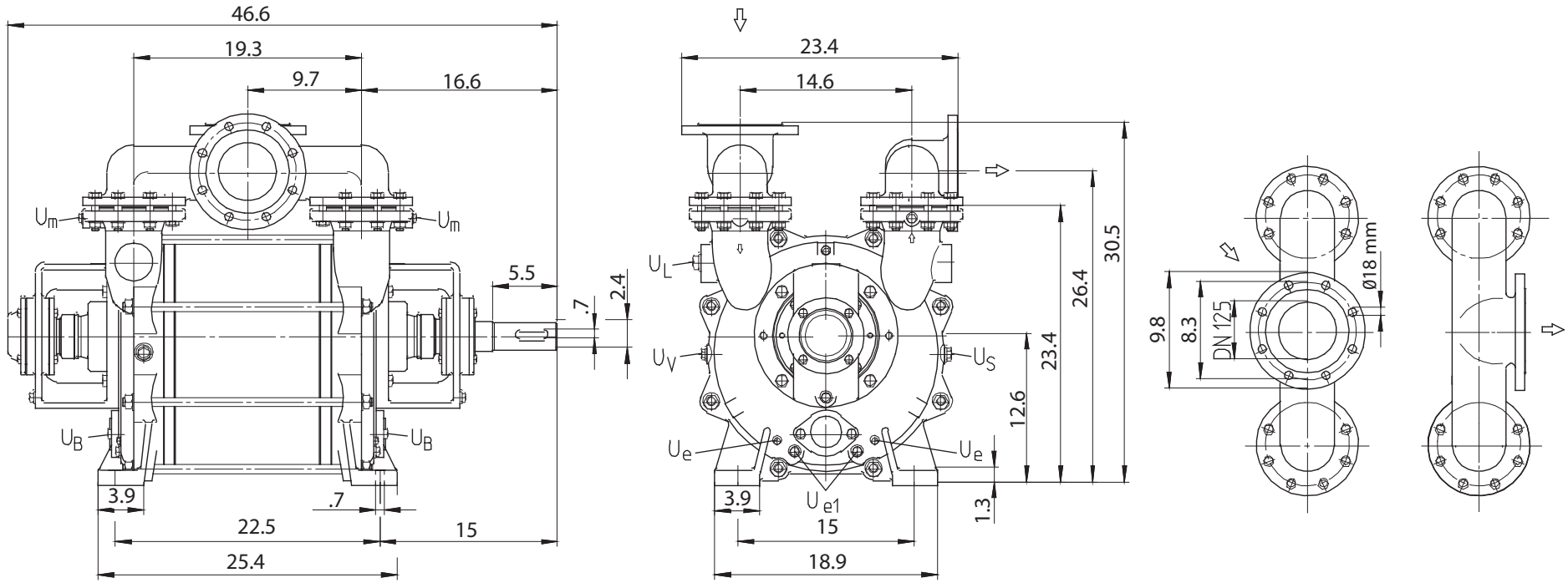

Designation	Explanation
U_B	Operating liquid connection, 2″
U_e /U_{e1}	Drainage (screw plug)
U_L	Ventilation valve connection
U_m	Manometer connection
U_S	Sensor connection
U_V	Drainage valve connection

INLET/DISCHARGE CONNECTIONS 5″

Ohio Medical Corporation®

SELECTORR SINGLE STAGE
LIQUID RING VACUUM PUMP
MODEL: 160D