Ohio® Medical

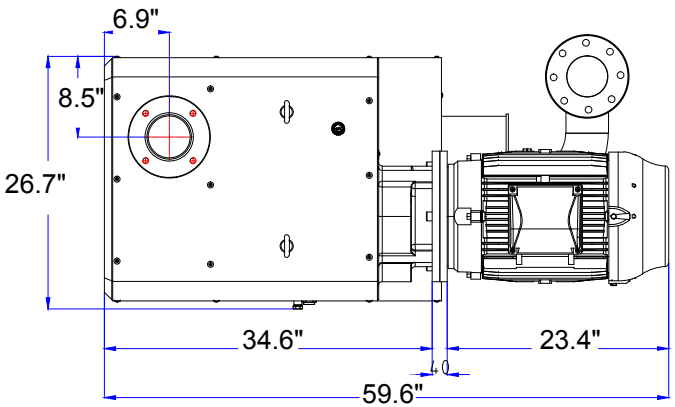

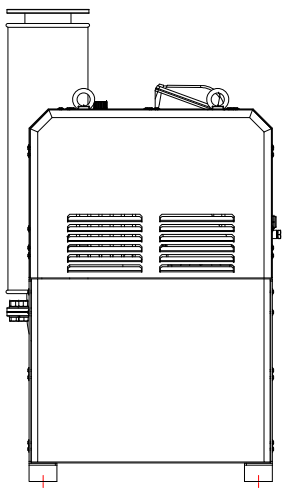

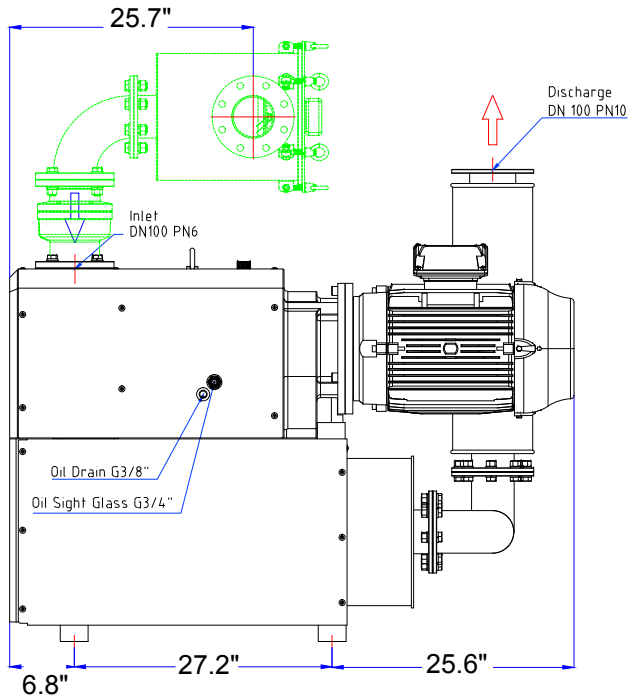

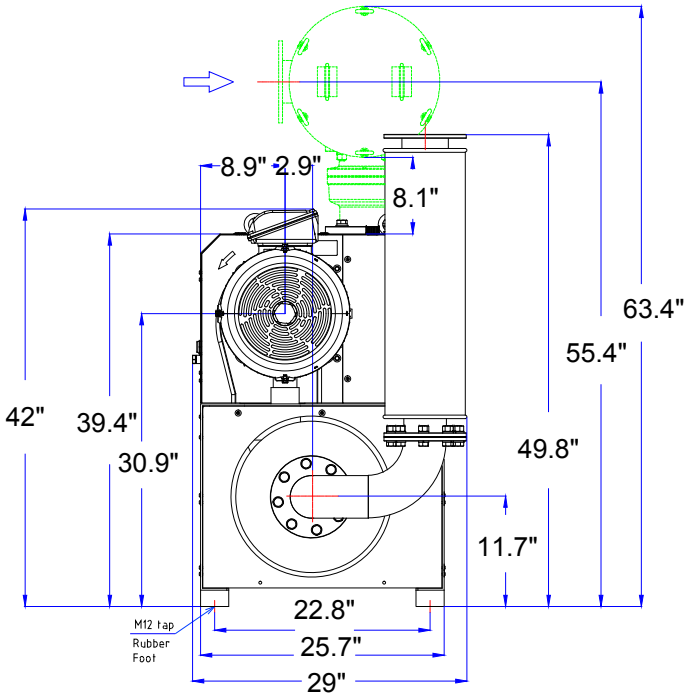

3			APP. BY	DATE 2015. 07. 22	SCALE 1;1
2			CHK. BY	C30 Claw with Motor: Part #264345	C30 Claw Vacuum Pump with 30 HP Nema 286TC Motor
1			DWN. BY K.H. Kwok	C30 Claw without Motor: Part #264345-LM	
NO	REVISIONS	SIGNATURE	TRC. BY	30 HP 3500 RPM Motor: Part #244294	DWG. NO 13-1K5286-00