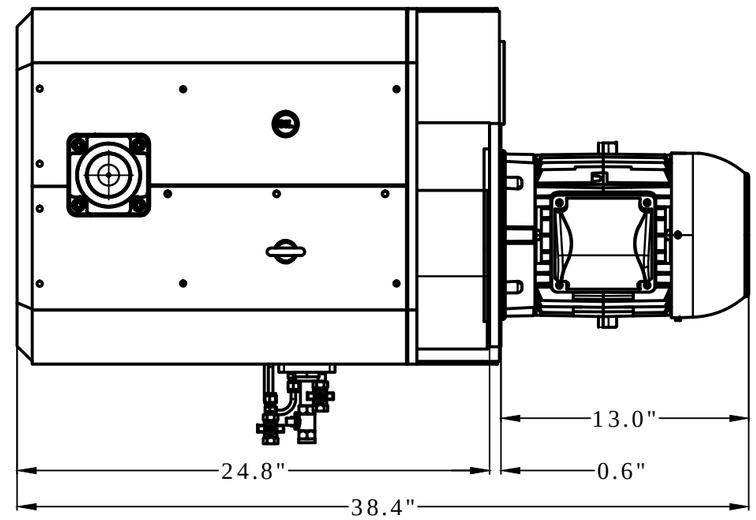

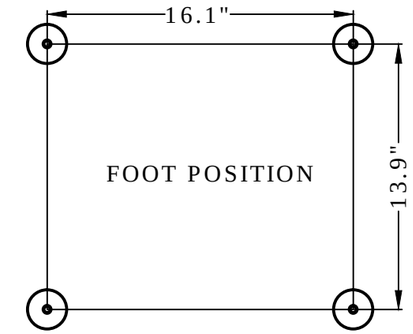

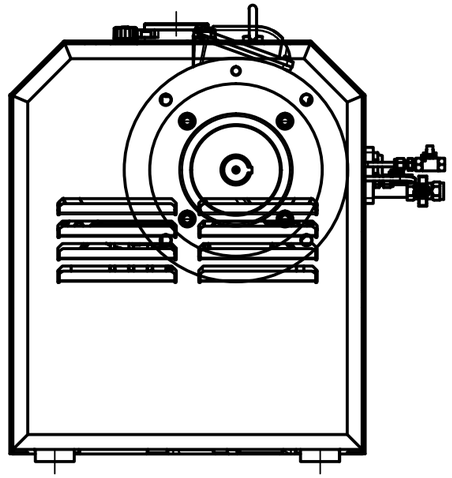

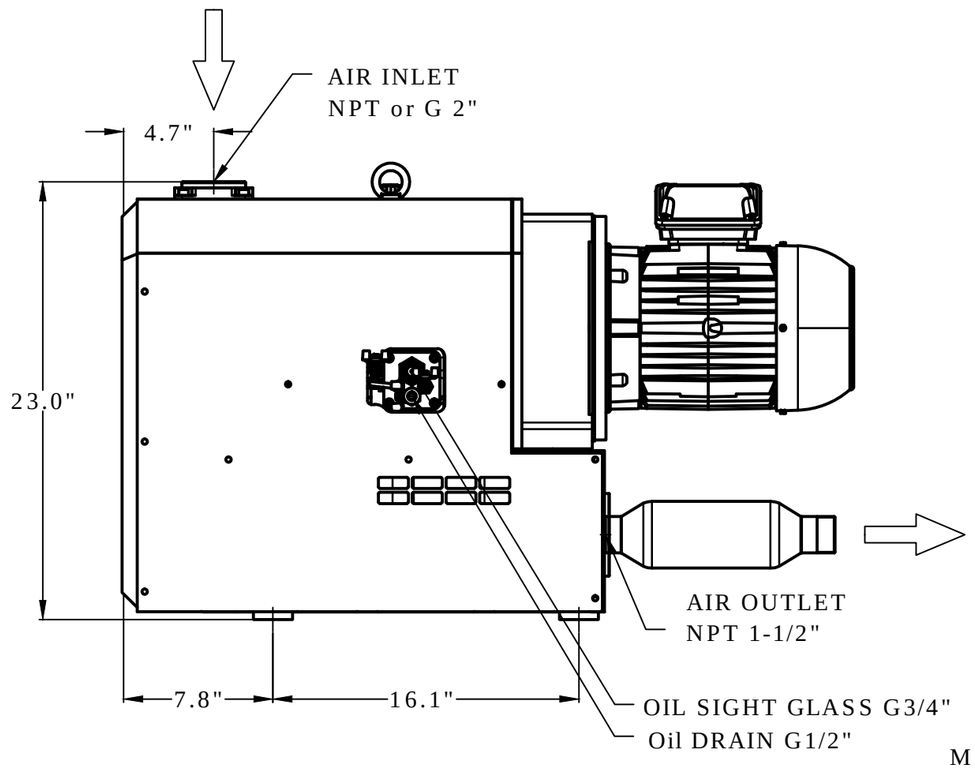

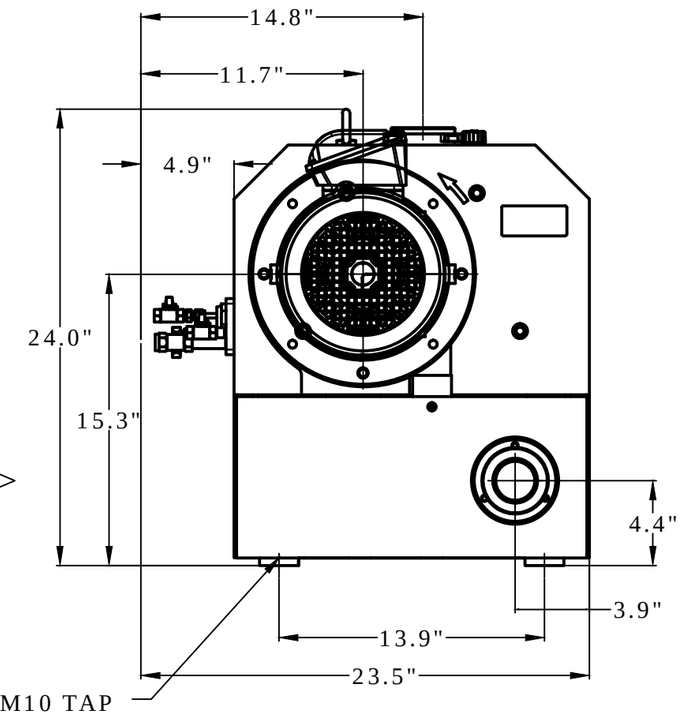

C7C CLAW WITH MOTOR:	PART # 264412
C7C CLAW WITHOUT MOTOR:	PART # 264365-LM
5HP 1800 RPM MOTOR:	PART # 244252

REV	ECO NO.	DESCRIPTION OF CHANGE	DATE	BY
1	10429	ORIGINAL RELEASE	02/23/2022	JG

DO NOT SCALE DRAWING
UNLESS OTHERWISE SPECIFIED:
DIMENSIONS ARE IN INCHES AND
TOLERANCES ARE:
X.X ± 0.1
X.XX ± 0.01
X.XXX ± 0.005
X.XX° ± 1°

THIRD ANGLE PROJECTION

MATERIAL: N/A

FINISH: N/A

FILE NAME: 264412.DWG

DRAWN BY: JG — DATE: 02/23/2022
CHECKED BY — DATE
APPROVED BY — DATE

Ohio Medical — always there | for life

COPYRIGHT & COPYRIGHTED BY OHIO MEDICAL LLC

ITEM DESCRIPTION: VACUUM PUMP, CLAW (C7LC)
WITH 5HP 1800 RPM 184TC NEMA MOTOR

SIZE: D — DRAWING NUMBER: 264412 — REV: 1

SCALE: 1:4 — SHEET 1 OF 1

CONFIDENTIAL: THIS DRAWING AND THE DESIGN REPRESENTED THEREON ARE THE PROPERTY OF OHIO MEDICAL LLC AND HAVE BEEN ISSUED WITH THE UNDERSTANDING THAT NEITHER DRAWING NOR THE INFORMATION THEREON IS TO BE USED OR DISCLOSED, EITHER IN WHOLE OR PART, EXCEPT AS SPECIFICALLY AUTHORIZED BY OHIO MEDICAL LLC AND SHALL BE RETURNED UPON REQUEST.